Installation Instructions

Corbin Russwin
ASSA ABLOY

ML2000 Series Mortise Locks with Sectional/Rose Trim

Motorized Electric Latch Retraction (MELR)

⚠ The accuracy of the door preparation is critical for proper functioning and security of this lock. Misalignment can cause premature wear and a lessening of security.

Tools Required:

- #2 and #3 Phillips screwdrivers
- 1/8" Allen Wrench

For escutcheon trim installation, please refer to the following instruction documents:

FM483 = M, N & P Escutcheons
FM484 = V, R & L Escutcheons
FM601 = Muséo Levers with Escutcheons

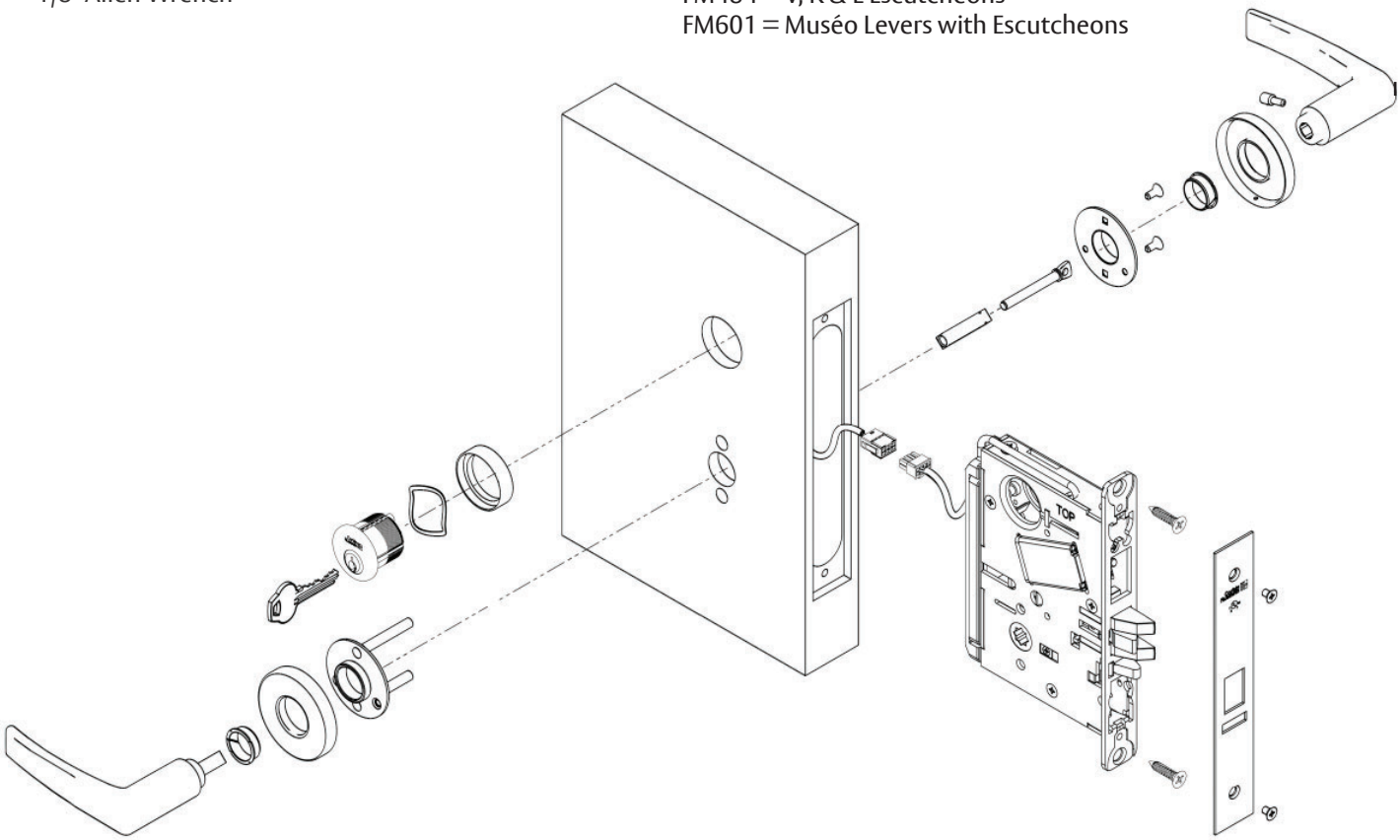

⚠ WARNING

This product can expose you to lead which is known to the state of California to cause cancer and birth defects or other reproductive harm. For more information go to www.P65warnings.ca.gov.

⚠ WARNING

Changes or modifications to this unit, not expressly approved by the party responsible for compliance could void the user's authority to operate the equipment.

⚠ WARNING

Attention Installer: Improper installation may result in damage to the product and void the factory warranty.

For installation assistance contact Corbin Russwin
1-800-810-WIRE (9473) • techsupport.corbinrusswin@assaabloy.com

Copyright © 2024, ASSA ABLOY Access and Egress Hardware Group, Inc. All rights reserved. Reproduction in whole or in part without the express written permission of ASSA ABLOY Access and Egress Hardware Group, Inc. is prohibited.

FM804 02/24

Experience a safer and more open world

ML2000 Series Mortise Locks with Sectional / Rose Trim

Motorized Electric Latch Retraction (MELR)

Installation Instructions

1 Door Preparation

Prep door according to supplied door marker. For door manufacturer templates, visit www.corbinrusswin.com.

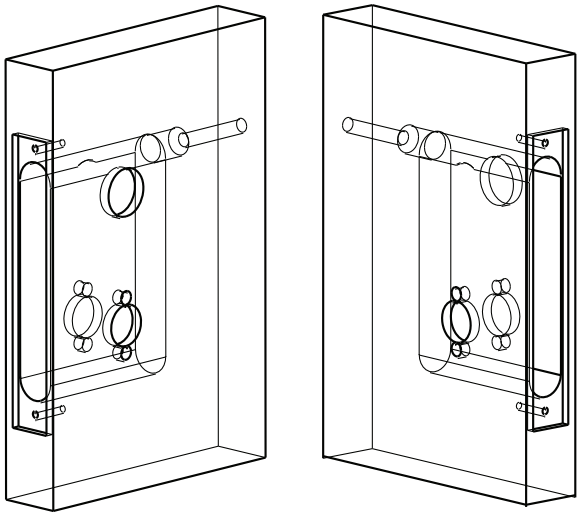

Inside Face of Door Outside Face of Door

2 Handing

Verify hand and bevel of door. Illustrations shown are as viewed from the outside or secure side of opening.

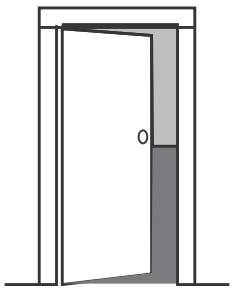

Left Hand
Hinges Left.
Open Inward.
"LH"

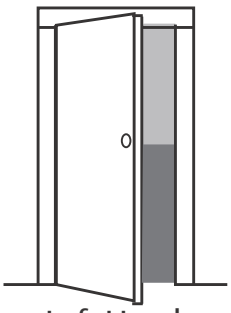

Left Hand
Reverse Bevel
Hinges Left.
Open Outward
"LHRB"

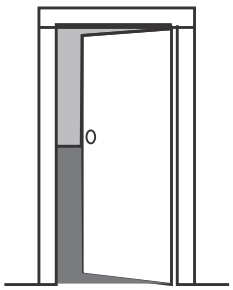

Right Hand
Hinges Right.
Open Inward.
"RH"

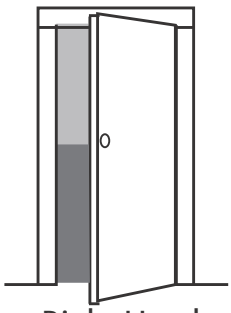

Right Hand
Reverse Bevel
Hinges Right.
Open Outward
"RHRB"

For installation assistance contact Corbin Russwin
1-800-810-WIRE (9473) • techsupport.corbinrusswin@assaabloy.com

Copyright © 2024, ASSA ABLOY Access and Egress Hardware Group, Inc. All rights reserved. Reproduction in whole or in part without the express written permission of ASSA ABLOY Access and Egress Hardware Group, Inc. is prohibited.

FM804 02/24

Experience a safer and more open world

ML2000 Series Mortise Locks with Sectional / Rose Trim

Motorized Electric Latch Retraction (MELR)

Installation Instructions

3 Latch Handing Instructions

1. Move the Red locking screw to side of lock-body being locked (Figure 1)
2. Push in latch partially then depress catch plate with screwdriver (Figure 1)

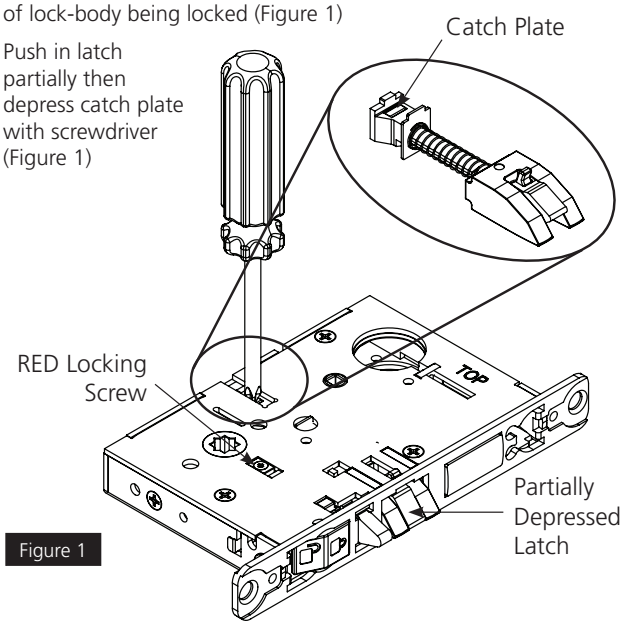

Figure 1

3. Pull latch out of lock-body and rotate 180 degrees (Figure 2)

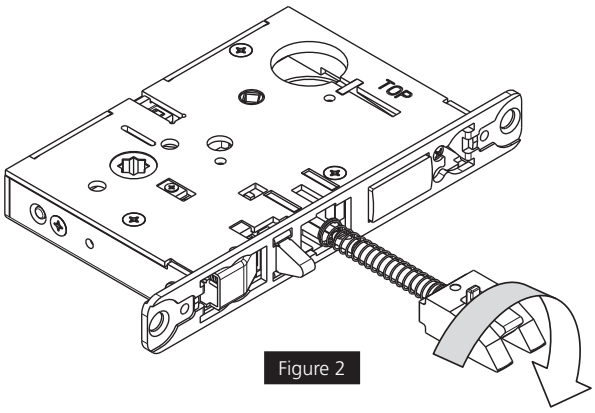

Figure 2

4. Push in latch until tail-piece hits back of case (Figure 3)

Note: Make sure catch plate is even with top surface and locking pin is not projected (Figure 4). If not, depress catch plate with screwdriver and repeat step 4.

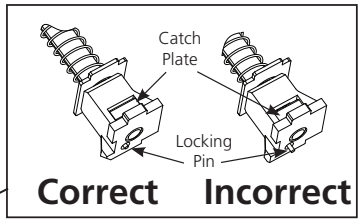

Figure 4

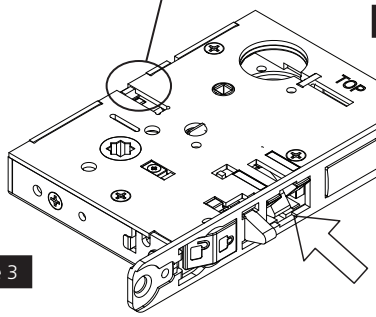

Figure 3

WARNING:
LOCK-IN CAN OCCUR IF LATCH IS NOT PROPERLY INSTALLED

5. Rotate lock front to match bevel of door as shown (Figure 5)

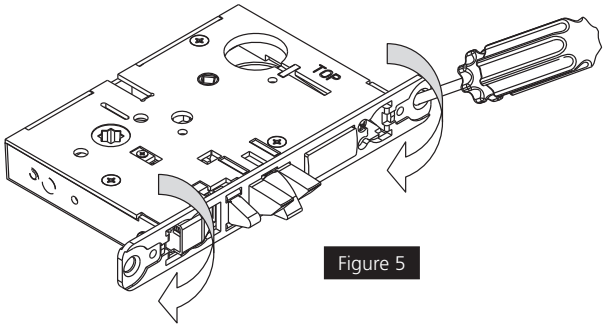

Figure 5

For installation assistance contact Corbin Russwin
1-800-810-WIRE (9473) • techsupport.corbinrusswin@assaabloy.com

Copyright © 2024, ASSA ABLOY Access and Egress Hardware Group, Inc. All rights reserved. Reproduction in whole or in part without the express written permission of ASSA ABLOY Access and Egress Hardware Group, Inc. is prohibited.

FM804 02/24

Experience a safer and more open world

5 Install Lock Body into Door

1. Plug mortise lock harness into ElectroLynx® harness in door (Figure 6).

Important: Door must remain open during installation. Use door stop.

2. Install, but do not tighten two #12 x 1" combination screws through lock body (Figure 6).

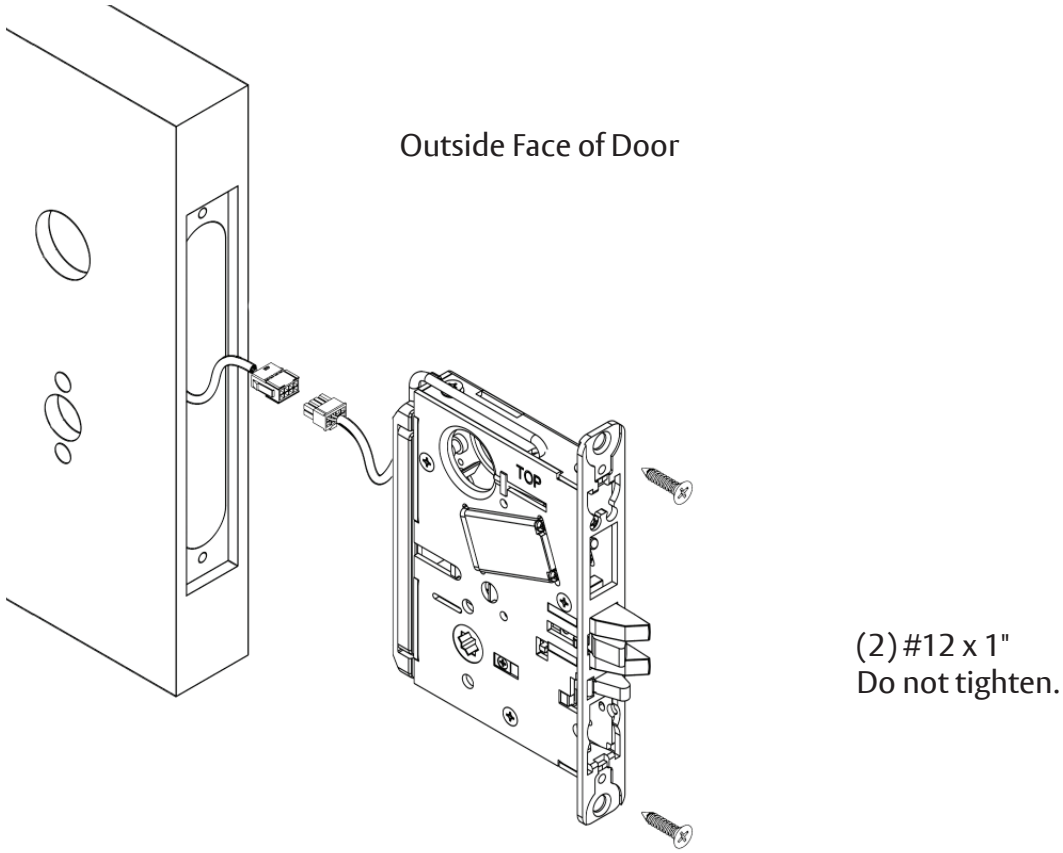

Figure 6

Copyright © 2024, ASSA ABLOY Access and Egress Hardware Group, Inc. All rights reserved. Reproduction in whole or in part without the express written permission of ASSA ABLOY Access and Egress Hardware Group, Inc. is prohibited.

6 Install cylinder with wave spring and collar, if required

NOTE: Cylinder must be oriented correctly (Figure 7). Pull key slightly out of cylinder to help thread into lockbody.

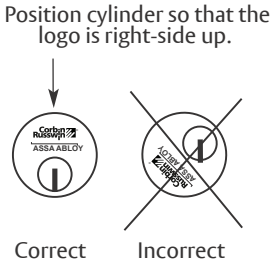

Figure 7

1. Secure with cylinder set screw (Figure 8).
2. Tighten lock mounting screws.

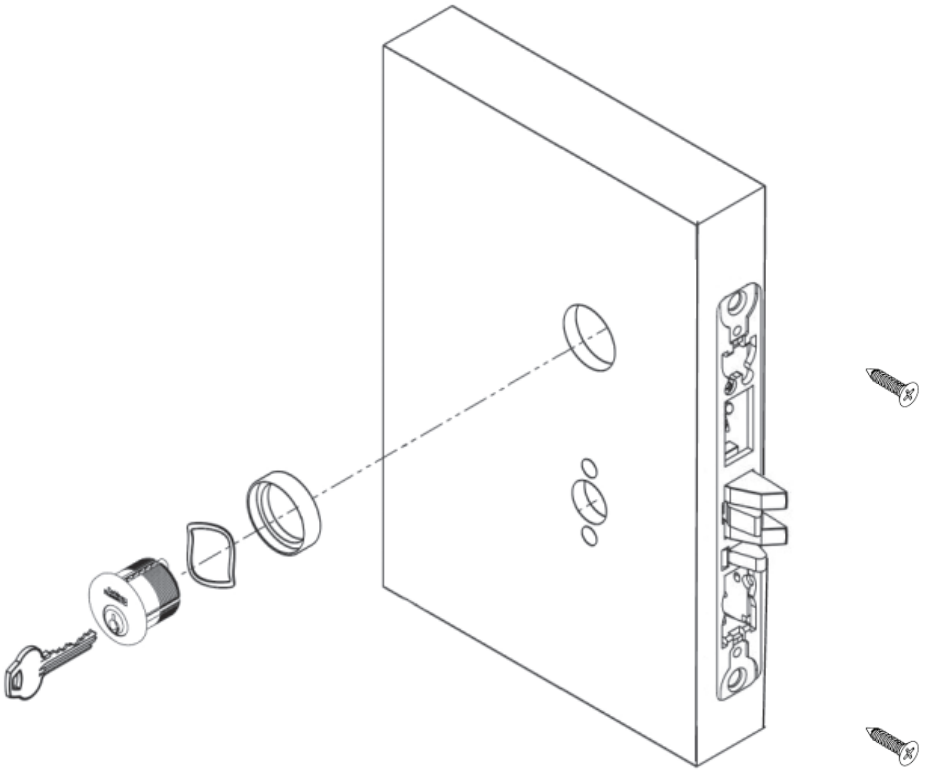

Figure 8

Copyright © 2024, ASSA ABLOY Access and Egress Hardware Group, Inc. All rights reserved. Reproduction in whole or in part without the express written permission of ASSA ABLOY Access and Egress Hardware Group, Inc. is prohibited.

7 Install Standard Lever Trim (See Section 8 for Museo Trim.)

Step 1a

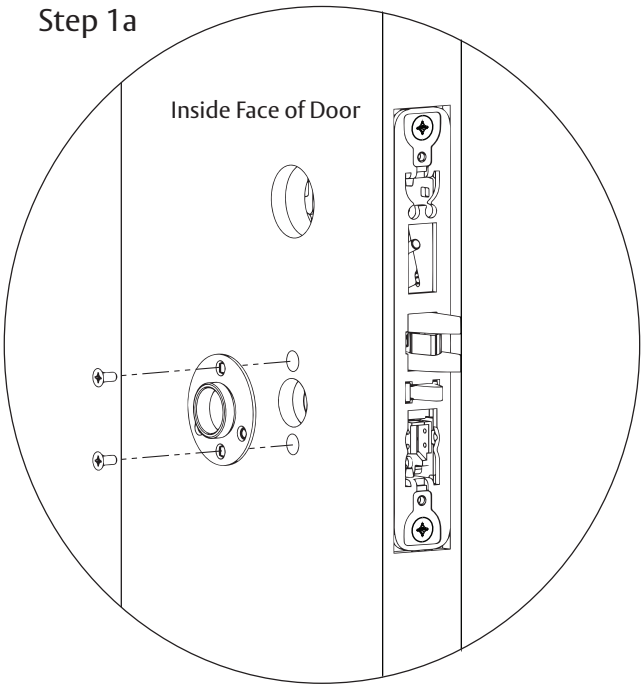

Step 1b

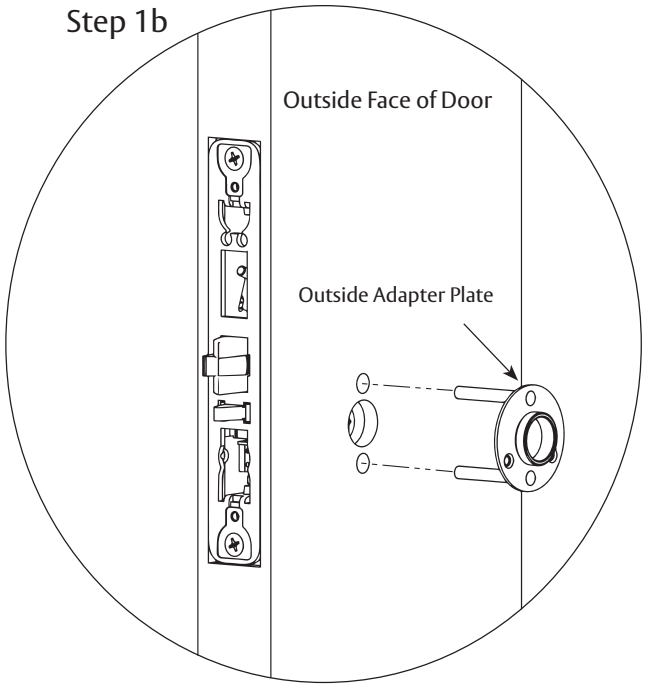

Step 2

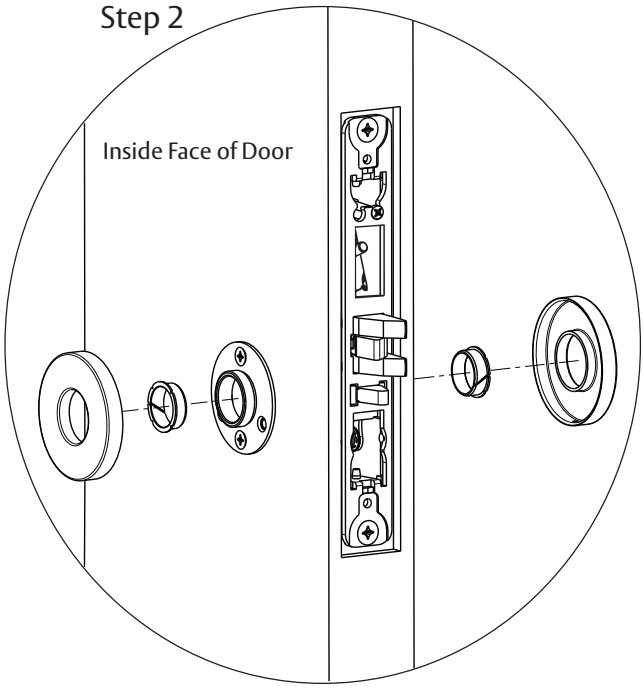

Step 3

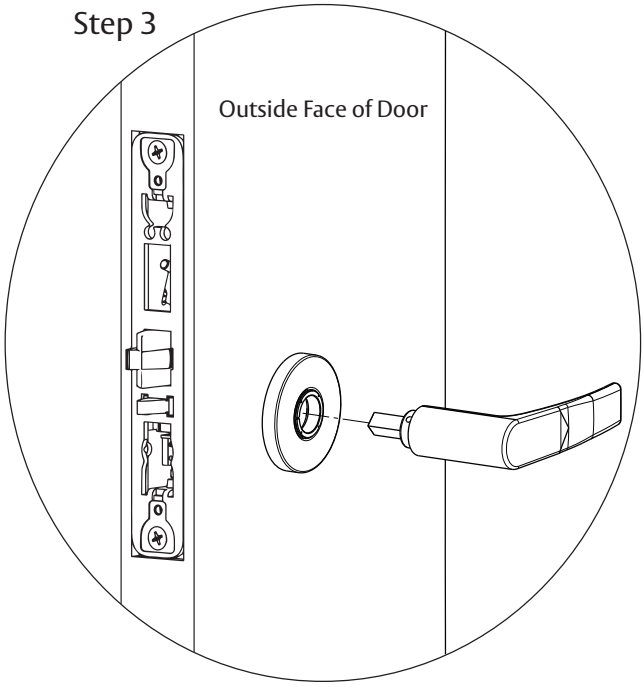

For installation assistance contact Corbin Russwin
1-800-810-WIRE (9473) • techsupport.corbinrusswin@assaabloy.com

Copyright © 2024, ASSA ABLOY Access and Egress Hardware Group, Inc. All rights reserved. Reproduction in whole or in part without the express written permission of ASSA ABLOY Access and Egress Hardware Group, Inc. is prohibited.

7 Install Standard Lever Trim, continued

Step 4

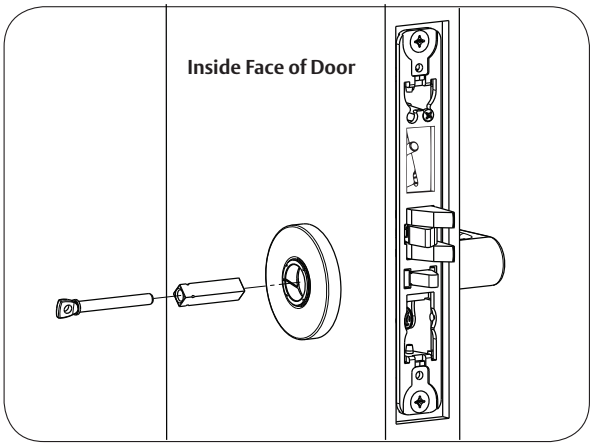

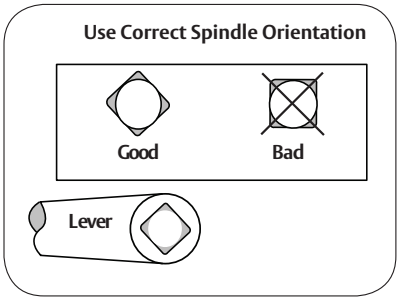

Step 5

Align adjustment bolt with threaded hole in lever

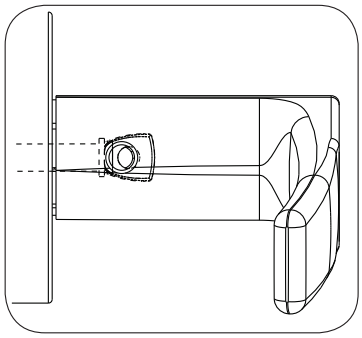

Adjustment bolt needs to be threaded in farther.

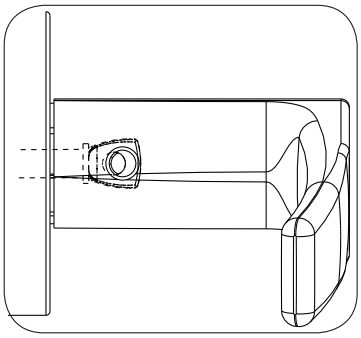

Adjustment bolt needs to be unthreaded.

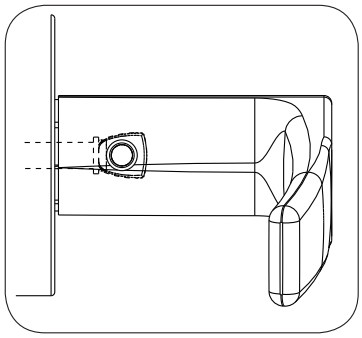

Adjustment bolt fully aligned.

Step 6

Notes:

- **Unthread Adjustment Bolt approximately four turns for a good starting point (After being fully tightened)**
- **Make sure O/S lever is fully inserted into adapter plate before aligning adjustment bolt.**

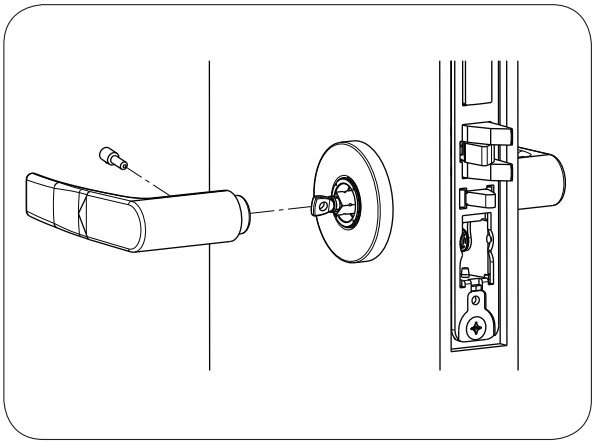

For installation assistance contact Corbin Russwin
1-800-810-WIRE (9473) • techsupport.corbinrusswin@assaabloy.com

Copyright © 2024, ASSA ABLOY Access and Egress Hardware Group, Inc. All rights reserved. Reproduction in whole or in part without the express written permission of ASSA ABLOY Access and Egress Hardware Group, Inc. is prohibited.

8 Install Museo Trim

1.)

Thread adapter plate hub into lever and fully tighten

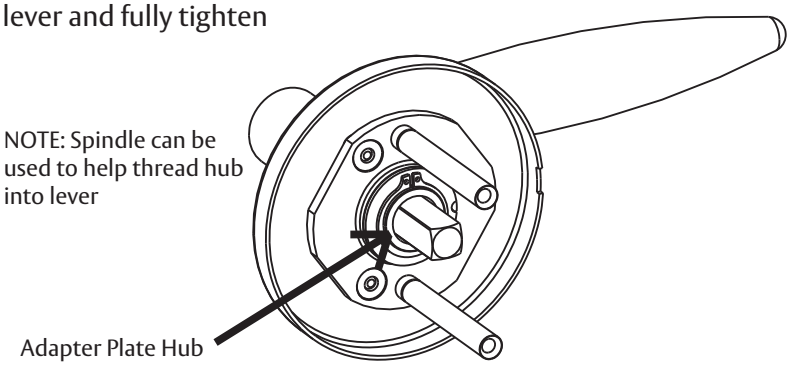

Align adapter plate hub with square hole in lever; keeping hub as tight as possible

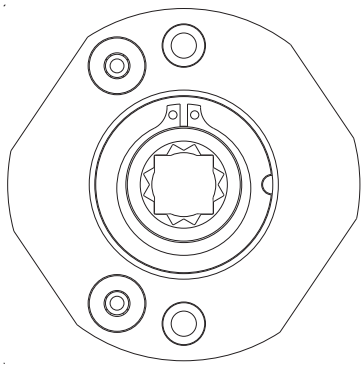

2.)

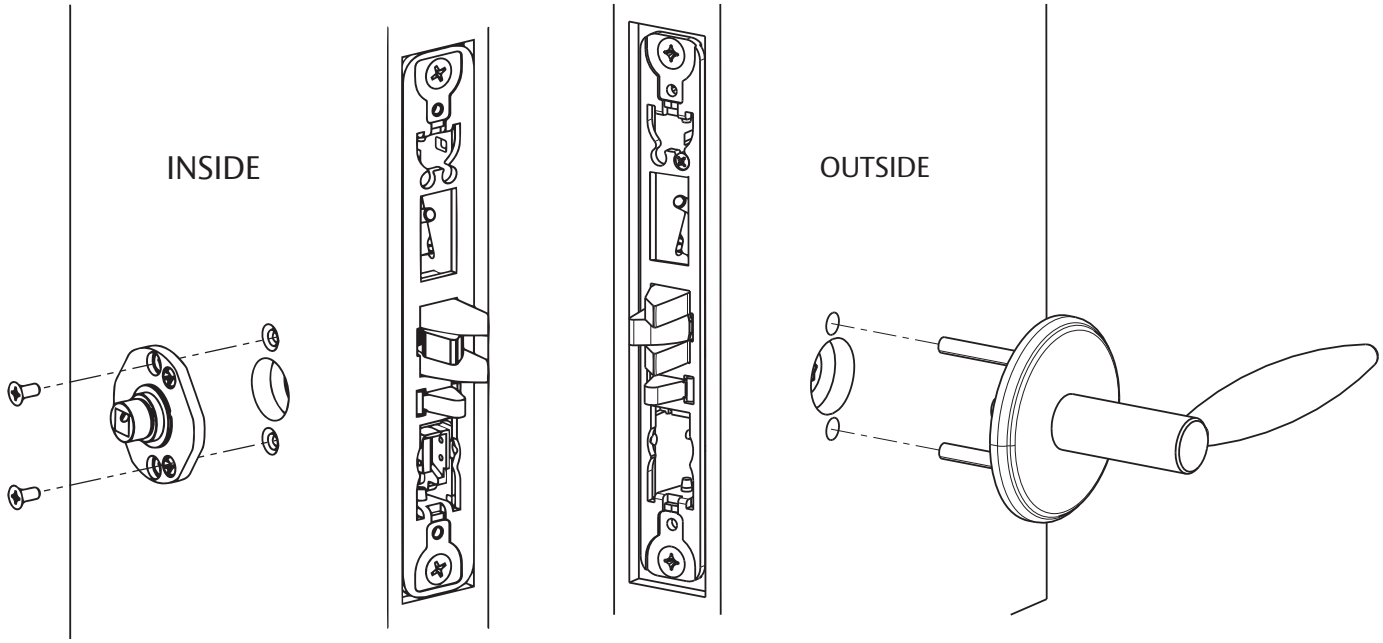

For installation assistance contact Corbin Russwin
1-800-810-WIRE (9473) • techsupport.corbinrusswin@assaabloy.com

Copyright © 2024, ASSA ABLOY Access and Egress Hardware Group, Inc. All rights reserved. Reproduction in whole or in part without the express written permission of ASSA ABLOY Access and Egress Hardware Group, Inc. is prohibited.

8 Install Museo Trim, continued

3.) Set screw in hub faces away from door edge.

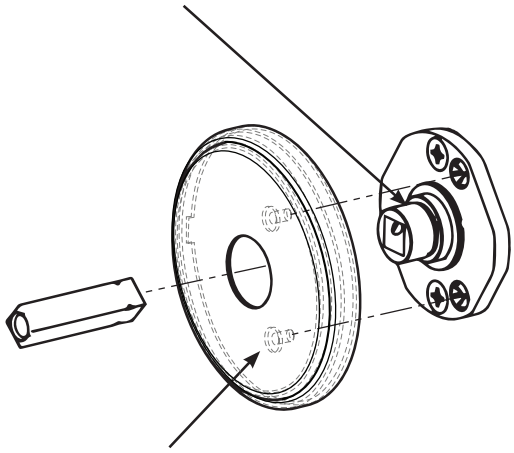

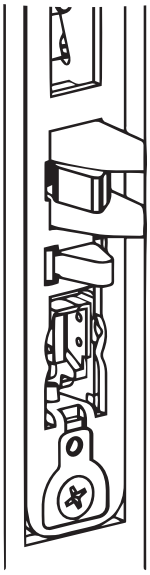

Align studs on rose with bushings in adapter plate

4.)

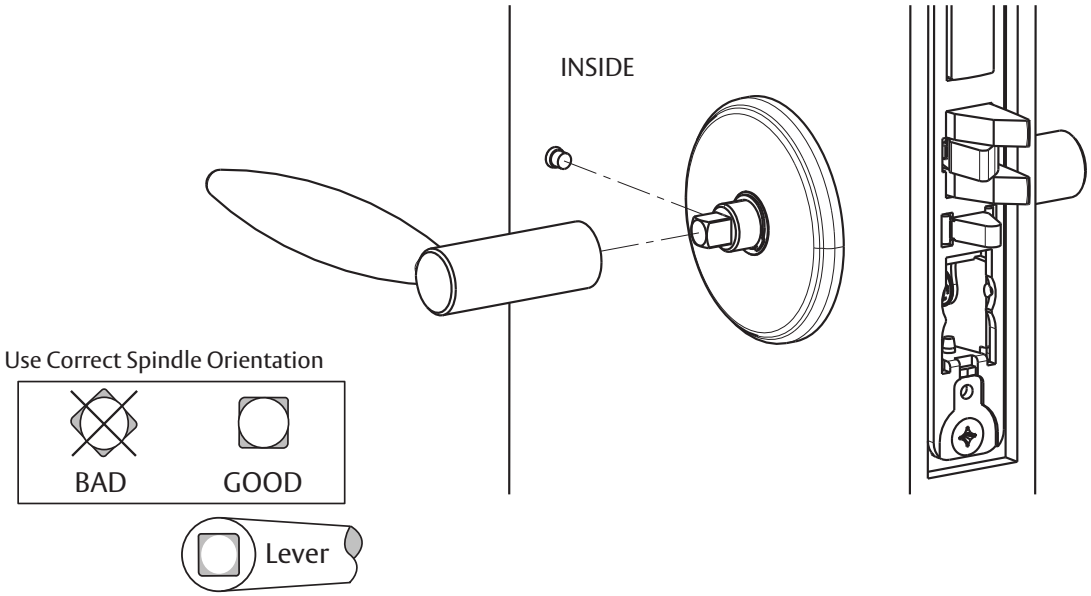

For installation assistance contact Corbin Russwin
1-800-810-WIRE (9473) • techsupport.corbinrusswin@assaabloy.com

Copyright © 2024, ASSA ABLOY Access and Egress Hardware Group, Inc. All rights reserved. Reproduction in whole or in part without the express written permission of ASSA ABLOY Access and Egress Hardware Group, Inc. is prohibited.

FM804 02/24

Experience a safer and more open world

9 Install Armored Front

1. Tighten (2) screws through lock body.
2. Attach armored front with two #8 x 1/4" screws (Figure 11).

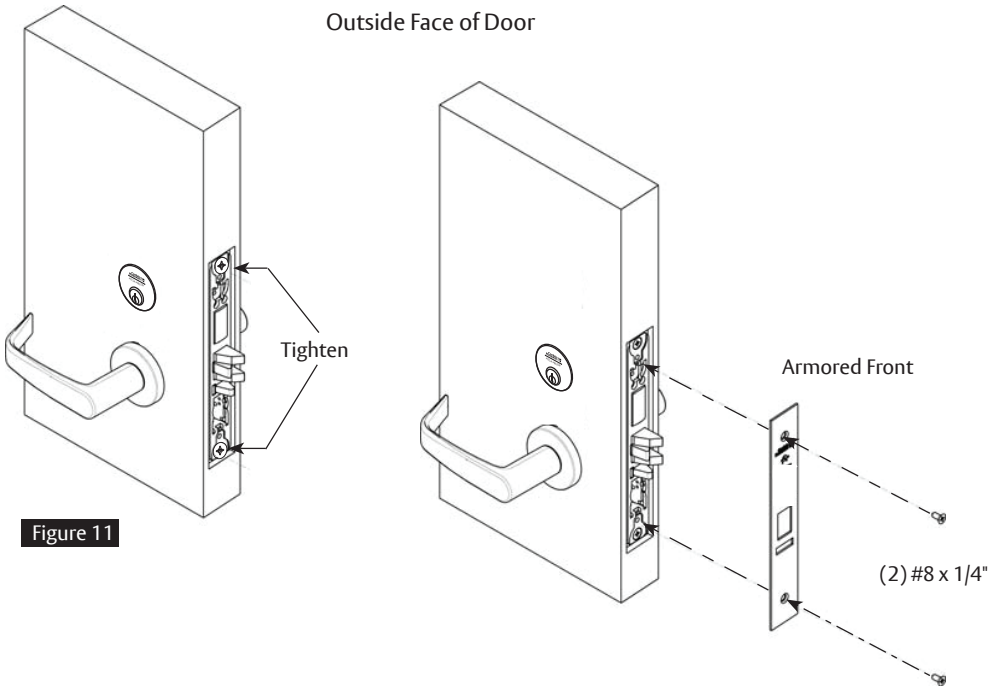

Figure 11

10 Mechanical Operational Check

For mortise locks with cylinders:

1. Insert key into cylinder and rotate: There should be no friction against lock case, wire harness or any other obstructions.
2. The key will retract the latch: Key should rotate freely.
3. Inside lever: Ensure it retracts the latch.
4. Close door: Ensure latch fully extends and does not bind.

For installation assistance contact Corbin Russwin
1-800-810-WIRE (9473) • techsupport.corbinrusswin@assaabloy.com

Copyright © 2024, ASSA ABLOY Access and Egress Hardware Group, Inc. All rights reserved. Reproduction in whole or in part without the express written permission of ASSA ABLOY Access and Egress Hardware Group, Inc. is prohibited.

FM804 02/24

Experience a safer and more open world

11 Wiring Diagram - Lock Schematic

Check polarity. Verify + (red) wire. For assistance, call 800-810-WIRE.

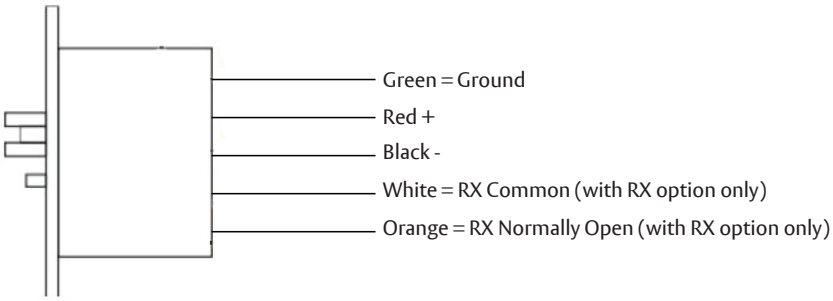

Electrical Specifications

- Voltage: 24 VDC (+10% / - 15%)
- Operating Current: 700mA
- Hold Current: 50mA

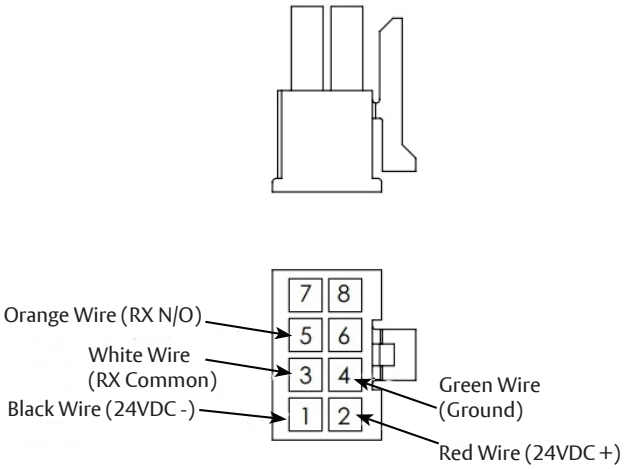

Connector pinout (RX option shown)

Notes:

- The minimum permissible wire size to be used shall not be less than 26 AWG.
- Shall be powered by a UL294 and ULC-60839 Class 2 Power Limited power suplly or Listed Control units.
- Wireing methods shall be in accordance with the National Electrical Code (ANSI/NFPA70), CSA 22.1, Canadian Electrical Code (CEC), Part I, Safety Standard for Electrical Installations, local codes and the authorities having jurisdiction.

For installation assistance contact Corbin Russwin
1-800-810-WIRE (9473) • techsupport.corbinrusswin@assaabloy.com

Copyright © 2024, ASSA ABLOY Access and Egress Hardware Group, Inc. All rights reserved. Reproduction in whole or in part without the express written permission of ASSA ABLOY Access and Egress Hardware Group, Inc. is prohibited.

12 Wiring Diagram - Simple Latch Retraction

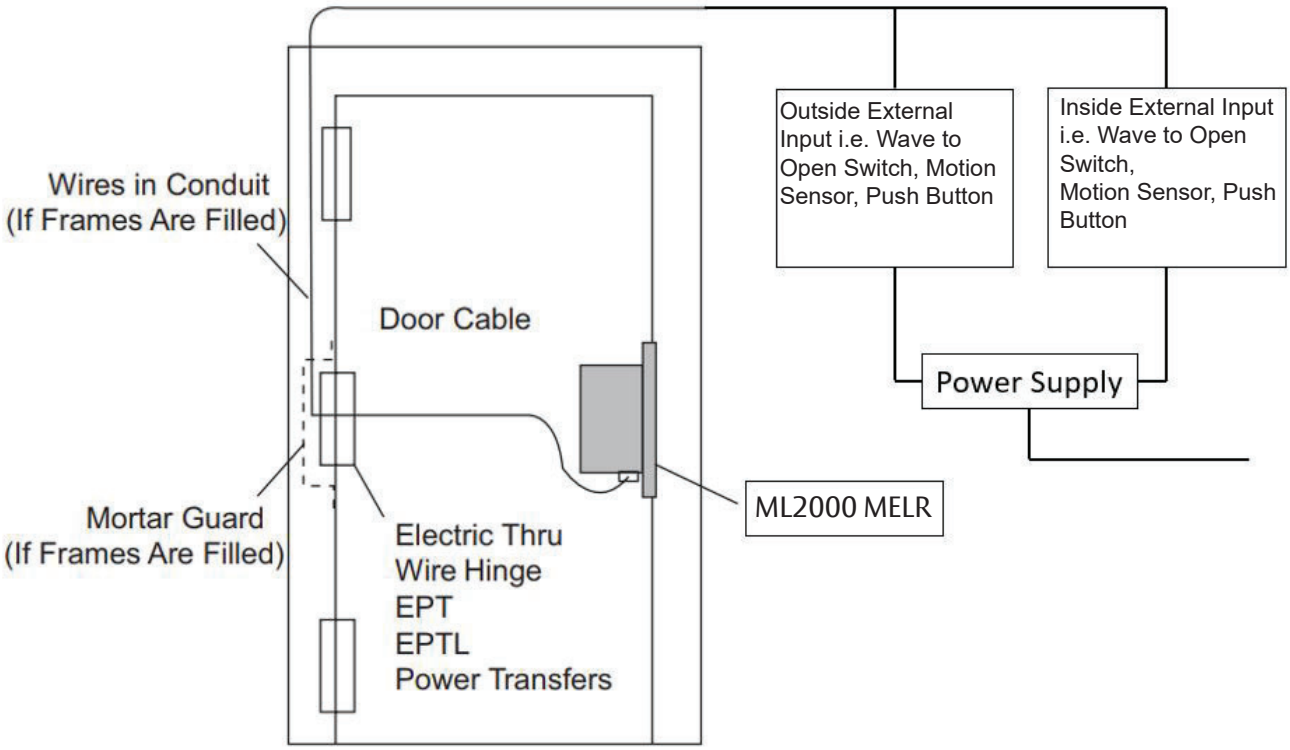

Operation: Activating inside or outside external input will retract latchbolt. Latchbolt remains retracted until power off.

For installation assistance contact Corbin Russwin
1-800-810-WIRE (9473) • techsupport.corbinrusswin@assaabloy.com

Copyright © 2024, ASSA ABLOY Access and Egress Hardware Group, Inc. All rights reserved. Reproduction in whole or in part without the express written permission of ASSA ABLOY Access and Egress Hardware Group, Inc. is prohibited.

FM804 02/24

Experience a safer and more open world

13 Wiring Diagram - Automatic Door

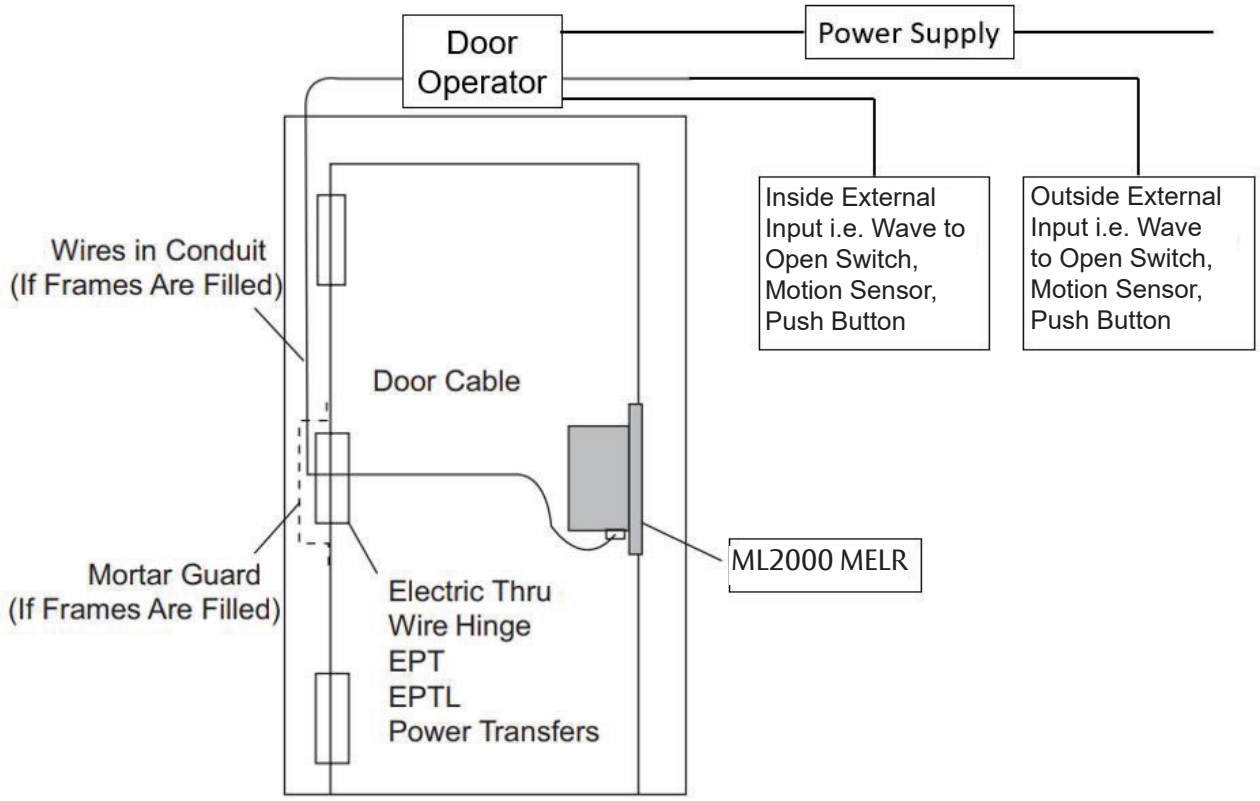

Operation: Activating inside or outside external input will retract latchbolt and door operator will open the door. Latchbolt remains retracted until power off.

For installation assistance contact Corbin Russwin
1-800-810-WIRE (9473) • techsupport.corbinrusswin@assaabloy.com

Copyright © 2024, ASSA ABLOY Access and Egress Hardware Group, Inc. All rights reserved. Reproduction in whole or in part without the express written permission of ASSA ABLOY Access and Egress Hardware Group, Inc. is prohibited.

FM804 02/24

Experience a safer and more open world

14 Wiring Diagram - Restroom Privacy

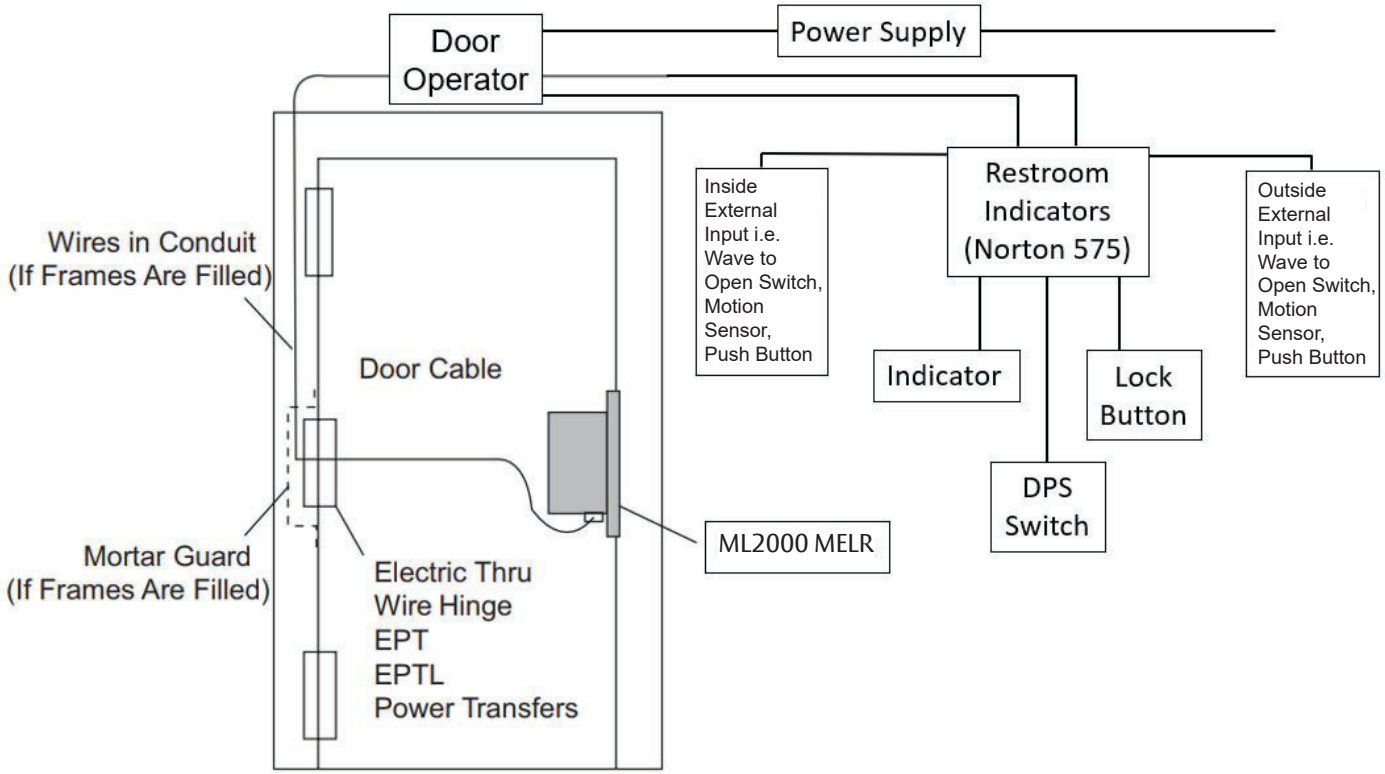

Operation: Activating inside or outside external input will retract latchbolt and door operator will open the door, unless outside external input is disabled by lock button. Indicator will illuminate when outside external input is disabled. Latchbolt remains retracted until power off.

Consult factory for electrical system layouts, riser and wiring diagrams.

For installation assistance contact Corbin Russwin
1-800-810-WIRE (9473) • techsupport.corbinrusswin@assaabloy.com

Copyright © 2024, ASSA ABLOY Access and Egress Hardware Group, Inc. All rights reserved. Reproduction in whole or in part without the express written permission of ASSA ABLOY Access and Egress Hardware Group, Inc. is prohibited.

FM804 02/24

Experience a safer and more open world

15 Electrical Operational Check

Latch retraction check:

1. Turn power ON.
2. Send latch retraction signal from control panel.
3. Verify latch retracts and re-projects at desired intervals.

For installation assistance contact Corbin Russwin
1-800-810-WIRE (9473) • techsupport.corbinrusswin@assaabloy.com

Copyright © 2024, ASSA ABLOY Access and Egress Hardware Group, Inc. All rights reserved. Reproduction in whole or in part without the express written permission of ASSA ABLOY Access and Egress Hardware Group, Inc. is prohibited.

FM804 02/24

Experience a safer
and more open world

For installation assistance contact Corbin Russwin
1-800-810-WIRE (9473) • techsupport.corbinrusswin@assaabloy.com

Copyright © 2024, ASSA ABLOY Access and Egress Hardware Group, Inc. All rights reserved.
Reproduction in whole or in part without the express written permission of ASSA ABLOY Access and Egress Hardware Group, Inc. is prohibited.

FM804 02/24

Experience a safer
and more open world